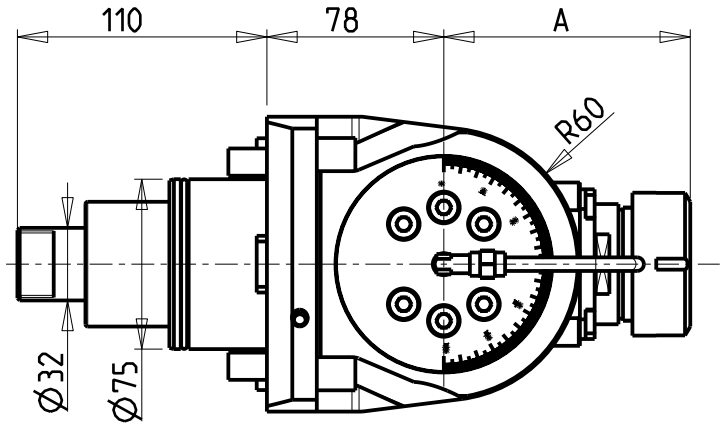

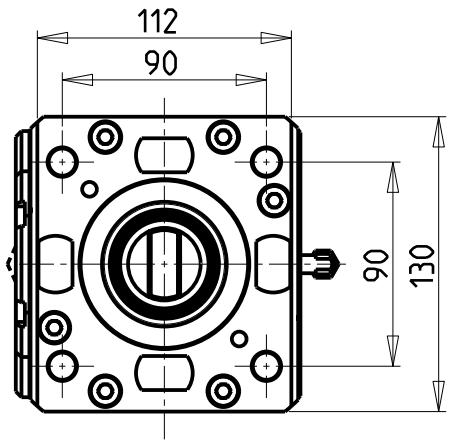

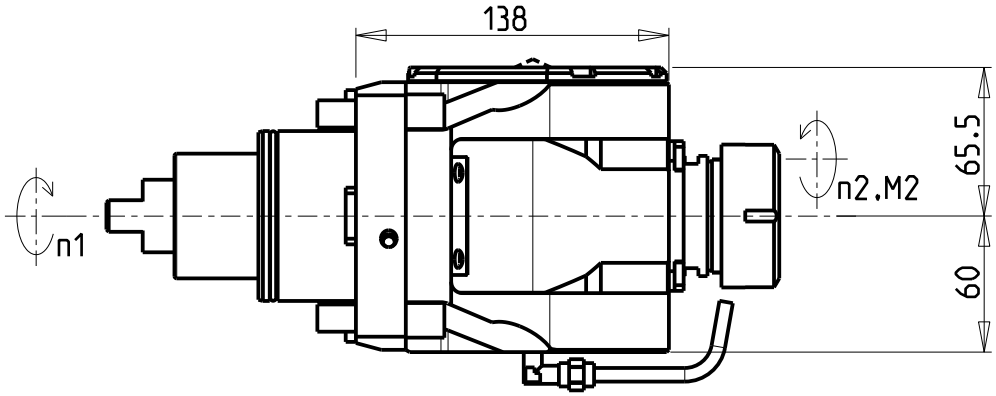

ATTENZIONE - ATTENTION - ACHTUNG

- Per lo smontaggio degli utensili utilizzare sempre la chiave di contrasto come indicato nel manuale d'uso.
- For disassembly of the tools use always the contrast key as mentioned in the user instructions.
- Fuer das Abmontieren der Werkzeuge immer den Gegenschluessel benutzen wie in der Bedienungsanleitung erwaehnt.

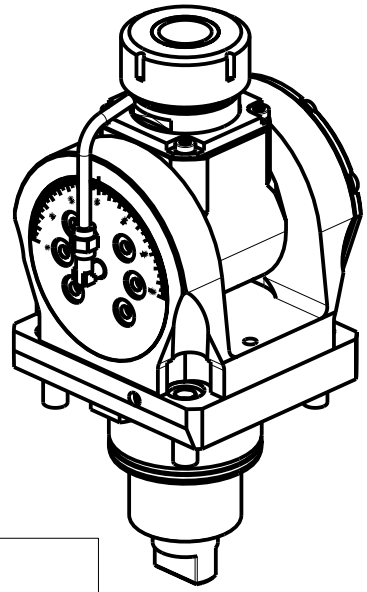

Cod. MT	Mandrino Spindle Spindel	I (n1:n2)	RPM max n2	Coppia Max Max Torque Max Drehmoment M2 [Nm]	Lubrificazione int. Coolant through Innenkuehlung Pmax [bar]	Lubr.esterna Ext. coolant Aussenkuehlung	Lav. secco Dry-run Trocken Bearb.	A	CHIAVI INCLUSE Keys included Schluessel inbegriffen				
DW00820332	ERA32	1:1	6000	50	-	X	X	81	CHUB30	CHUB46	CHTAER32ZC	CHESL10	CHESL06
DW00820432	ERA32	1:1	6000	50	100 (diag. 2)	X	X	81	CHUB30	CHUB46	CHTAER32ZC	CHESL10	CHESL06
DW00820140	ER40	1:1	6000	50	-	X	X	108.66	-	CHUB46	CHSTER40	CHESL10	CHESL06
DW00820240	ER40	1:1	6000	50	100 (diag. 2)	X	X	108.66	-	CHUB46	CHSTER40	CHESL10	CHESL06

SMEC (SAMSUNG)

MOD: SL45 MC - PL45 MC/LY - SLV 80M - SLV800M - PL800VM - SL4500M/Y - SL5500M

MODULO MOTORIZZATO ORIENTABILE +/-90°
+/-90° adjustable angle driven tool
Angetriebenes Werkzeug schwenkbar +/-90°

M.T. srl
Via Casino Albini 480
Tel. 0541/956034-957884
Fax 0541/956341
47842 S. GIOVANNI IN M. (RN)
e-mail: mtma@mtmarchetti.com
http://www.mtmarchetti.com

SMG339-2-00

Subject to change without notice.

09/2025