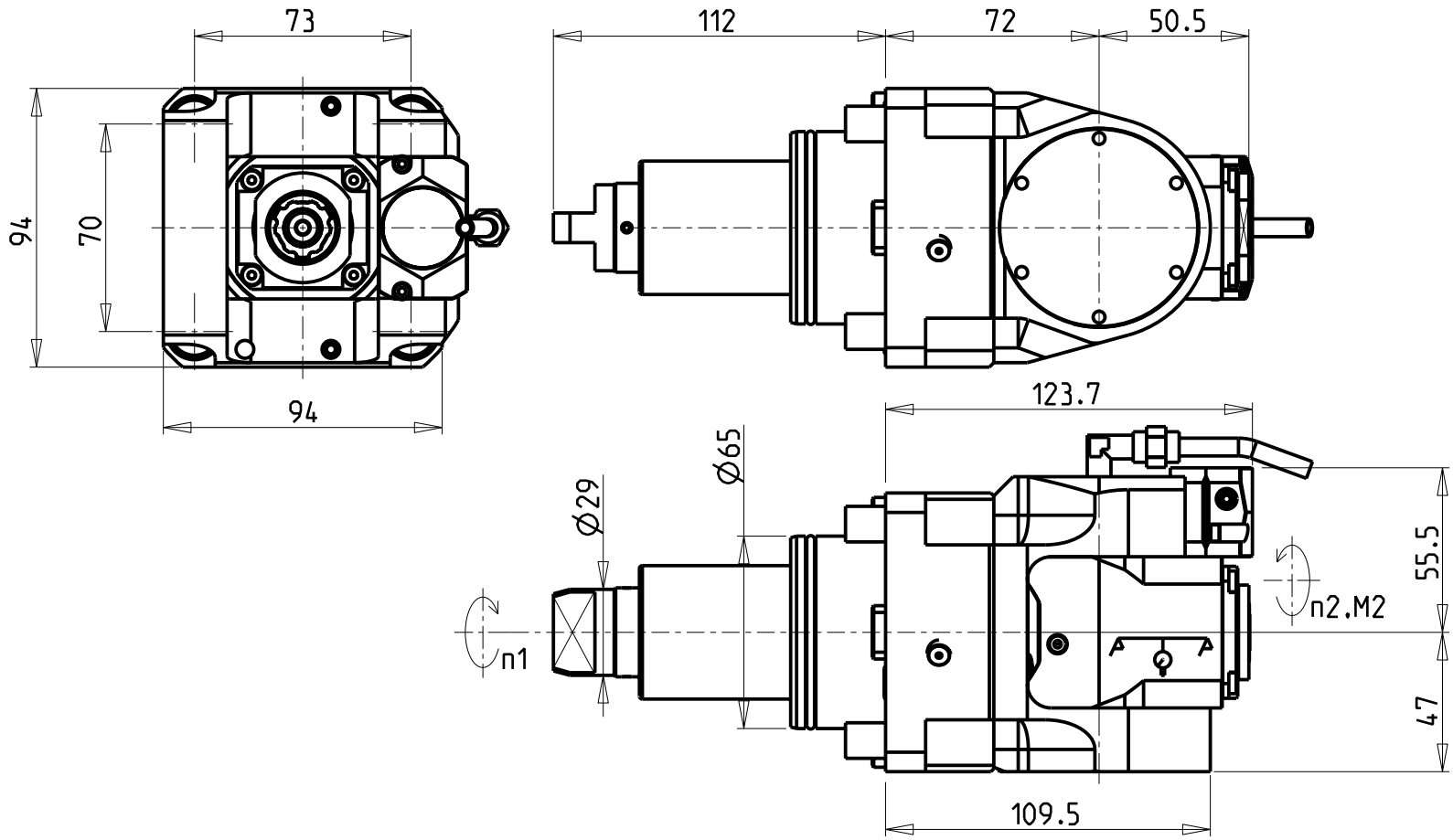

ATTENZIONE - ATTENTION - ACHTUNG

- Per lo smontaggio degli utensili utilizzare sempre la chiave di contrasto come indicato nel manuale d'uso.
- For disassembly of the tools use always the contrast key as mentioned in the user instructions.
- Fuer das Abmontieren der Werkzeuge immer den Gegenschluessel benutzen wie in der Bedienungsanleitung erwaehnt.

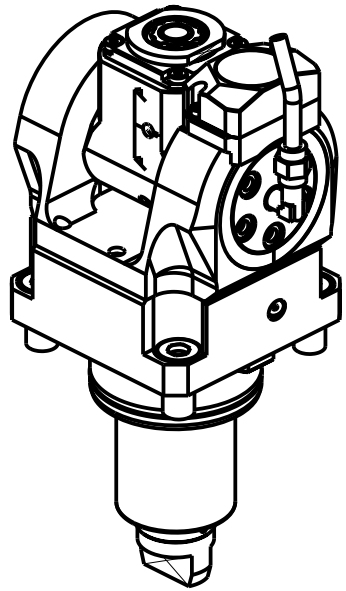

Cod. MT	Mandrino Spindle Spindel	I (n1:n2)	RPM max n2	Coppia Max Max Torque Max Drehmoment M2 (Nm)	Reversibile 180° 180° Reversible 180° umsetzbar	Lubrificazione int. Coolant through Innenkuehlung Pmax (bar)	Lubr.esterna Ext. coolant Aussenkuehlung	Lav. secco Dry-run Trocken Bearb.	CHIAVI INCLUSE Keys included Schluessel inbegriffen			
DW01945316	ERA16	1:2	12000	8	X	-	X	X	CHUB19_SP3	CHUB32	CHTAER16ZC	CHESL08
DW01945416	ERA16	1:2	12000	8	X	70	X	-	CHUB19_SP3	CHUB32	CHTAER16ZC	CHESL08

SMEC (SAMSUNG)

MOD: SL 20/25/35 MC - PL 20/25/35 MC - SL25ASY - PL2000/2500SY - SL2000T2Y2 - SL2500/3000 M/Y/SY - SL3500Y

MODULO MOTORIZZATO ORIENTABILE ±90° MOLTIPLICATO I=1:2 CON NONIO DIGITALE
±90° adjustable angle driven tool geared-up I=1:2 with digital display
Angetriebenes Werkzeug schwenkbar ±90° uebersetzt I=1:2 mit digital display

M.T. srl
Via Casino Albini 480
Tel. 0541/956034-957884
Fax 0541/956341
47842 S. GIOVANNI IN M. (RN)
e-mail: mtma@mtmarchetti.com
http://www.mtmarchetti.com

SMG336-1-01

Subject to change without notice.

09/2025