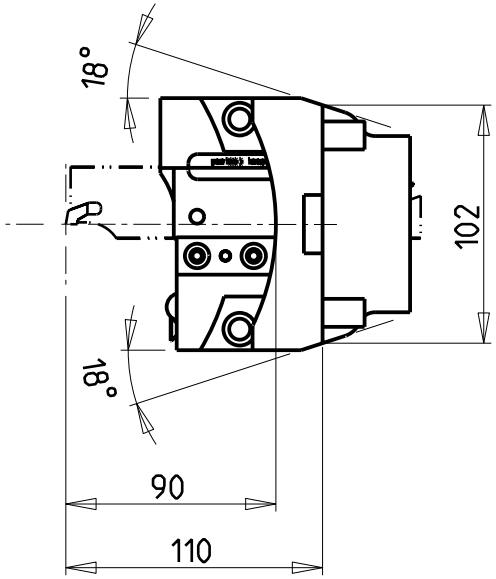

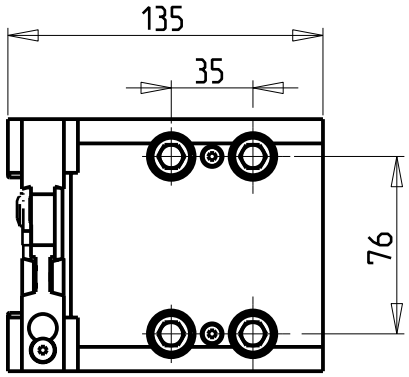

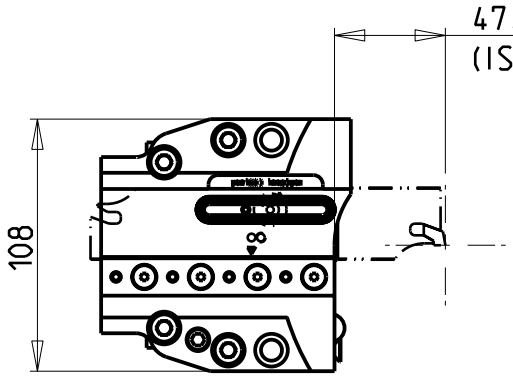

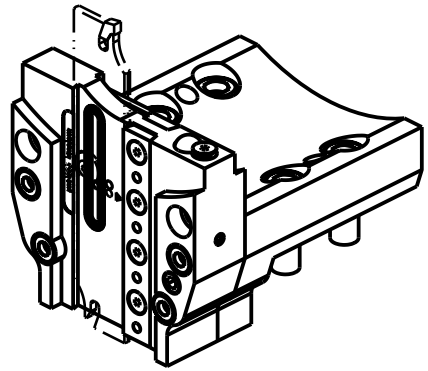

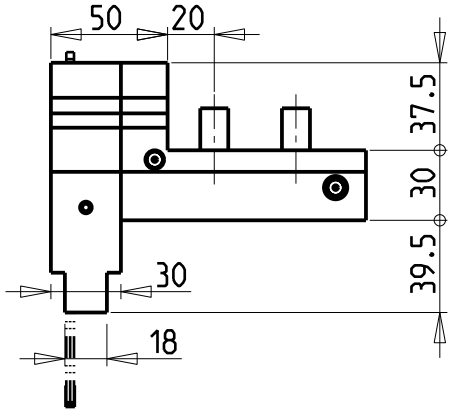

POSSIBILITA' DI LAVORO M3/M4
OPTION OF M3/M4 WORKING
ARBEITSMÖGLICHKEIT M3/M4

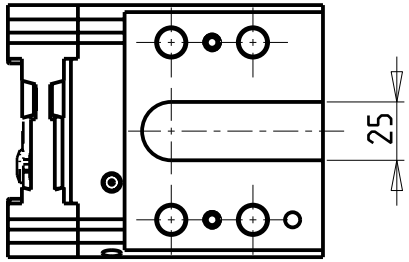

KIT LAME NON INCLUSI (OPZIONALI)
BLADES NOT SUPPLIED WITH (OPTIONAL)
KLINGEN NICHT INBEGRIFFEN (OPTIONAL)

- LAMA-BLADE-KLINGE SANDVIK H=32 sp.3 cod. QD_NN2G60C25A
  +INSERTI-INSERTS-EINLAGEN cod. QD_NG_0300_0002_CM_1145 (10 pz.)
- LAMA-BLADE-KLINGE SANDVIK H=32 sp.4 cod. QD_NN2H60C25A
  +INSERTI-INSERTS-EINLAGEN cod. QD_NH_0400_0002_CM_1145 (10 pz.)
- LAMA-BLADE-KLINGE ISCAR H=32 sp.3 cod. SGFH_32K_3
  +INSERTI-INSERTS-EINLAGEN cod. 6011365 (10pz.)
- LAMA-BLADE-KLINGE ISCAR H=32 sp.4 cod. SGFH_32K_4
  +INSERTI-INSERTS-EINLAGEN cod. 6011366 (10pz.)
- LAMA-BLADE-KLINGE WALTER H=32 sp.3 cod. G2042.32N-3T45SX-P
  +INSERTI-INSERTS-EINLAGEN cod. SX-3E300N02-CE4 WSM33S (10pz.) + CHIAVE-KEY cod. FS1494
- LAMA-BLADE-KLINGE WALTER H=32 sp.4 cod. G2042.32N-4T50SX-P
  +INSERTI-INSERTS-EINLAGEN cod. SX-4E400N02-CE4 WSM33S (10pz.) + CHIAVE-KEY cod. FS1494

Cod. MT	N°Utensili N°Tools N°Werkzeuge	Lubr.esterna Ext. coolant Aussenkuehlung	Lubrificazione int. Coolant through Innenkuehlung Pmax [bar]
MSL0540132	1	X	70

DMG-MORI

MOD: SL-ZL200/203/204/250/253/254(MC-SMC) SL2500Y DL-ZL200/250(MC)

PORTAUTENSILE PER LAMA DOPPIO CON LUBRIFICAZIONE INTERNA
Radial double blade holder with internal coolant
Radial Doppel-Abstechhalter mit Innenkuehlung

M.T. srl
Via Casino Albini 480
Tel. 0541/956034-957884
Fax 0541/956341
47842 S. GIOVANNI IN M. (RN)
e-mail: mtma@mtmarchetti.com
http://www.mtmarchetti.com

MSL520-2-04

Subject to change without notice.

09/2025