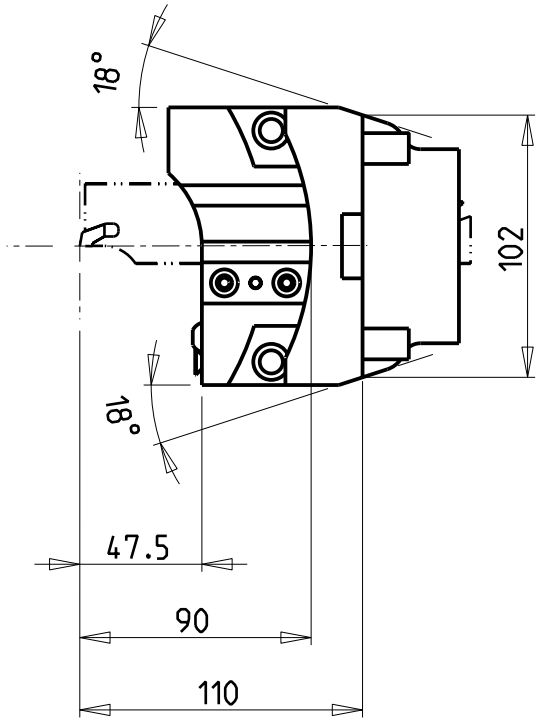

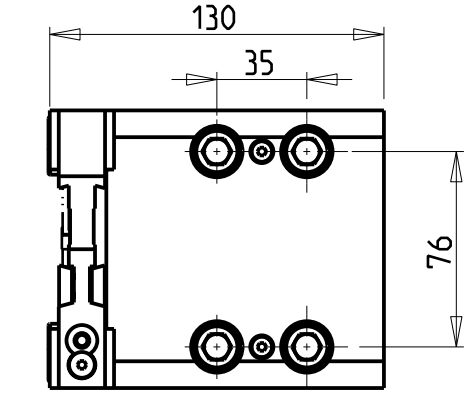

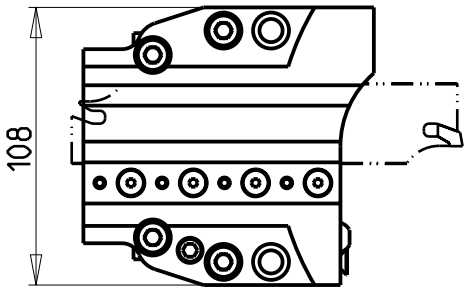

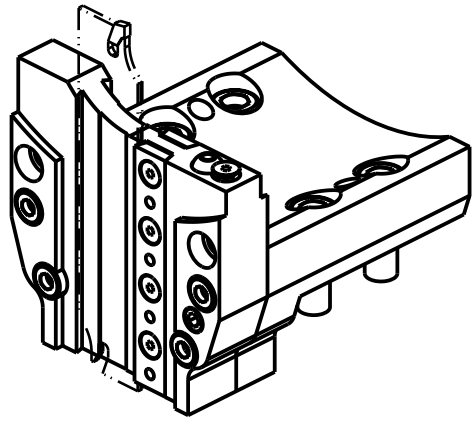

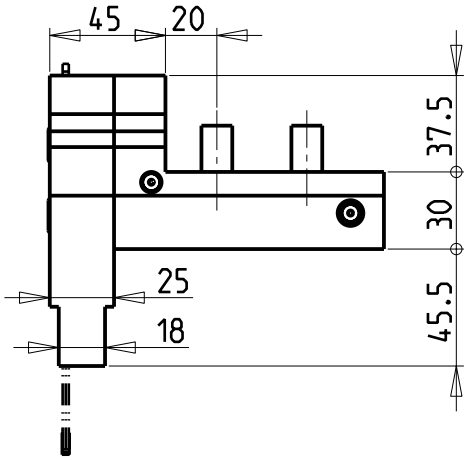

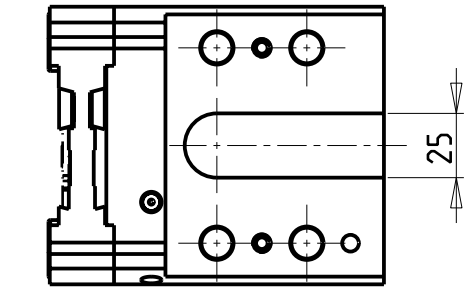

POSSIBILITA' DI LAVORO M3/M4
OPTION OF M3/M4 WORKING
ARBEITSMÖGLICHKEIT M3/M4

LAMA ED INSERTI NON INCLUSI (OPZIONALI)
BLADE AND INSERTS NOT INCLUDED (OPTIONAL)
KLINGE UND EINSAETZE NICHT INBEGRIFFEN (OPTIONAL)

Cod. MT	N°Utensili N°Tools N°Werkzeuge	Lubr.esterna Ext. coolant Aussenkuehlung
MSL0530132	1	X

DMG-MORI

MOD: SL-ZL200/203/204/250/253/254(MC-SMC) SL2500Y DL-ZL200/250(MC)

PORTAUTENSILE PER LAMA DOPPIO
Radial double blade holder
Radial Doppel-Abstechhalter

M.T. srl
Via Casino Albini 480
Tel. 0541/956034-957884
Fax 0541/956341
47842 S. GIOVANNI IN M. (RN)
e-mail: mtma@mtmarchetti.com
http://www.mtmarchetti.com

MSL520-2-00

Subject to change without notice.

09/2025