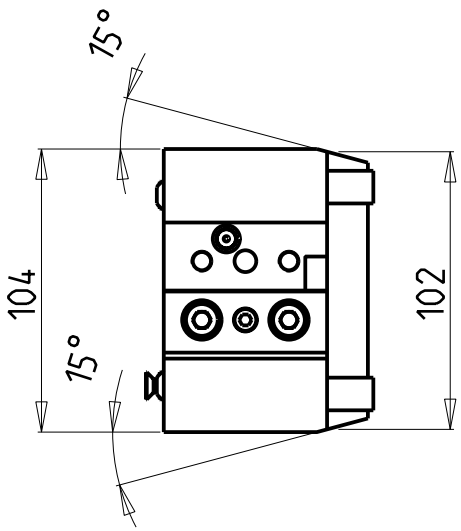

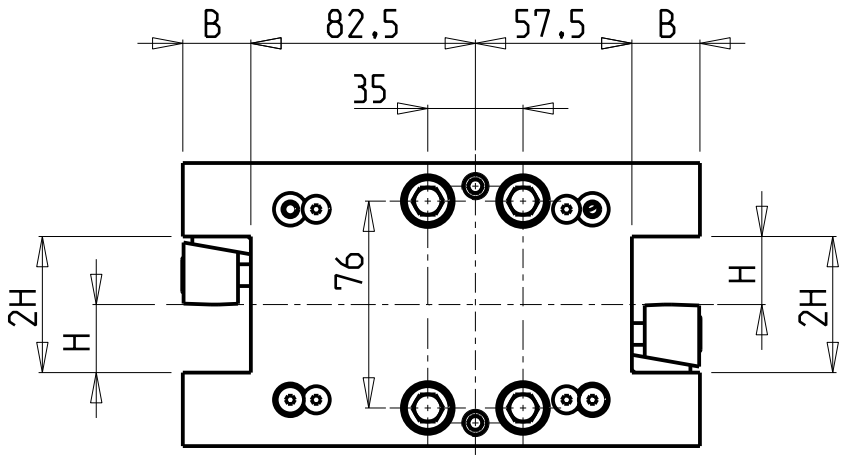

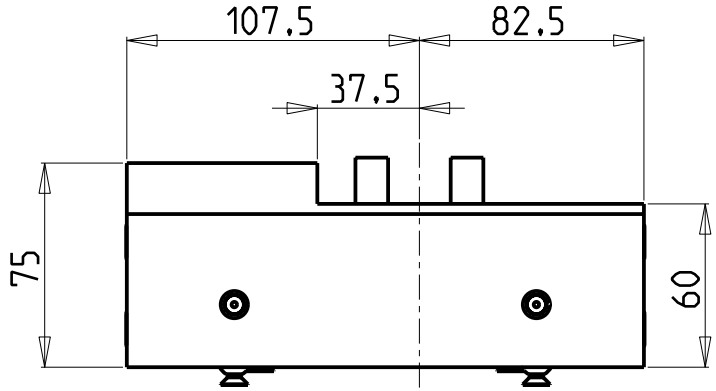

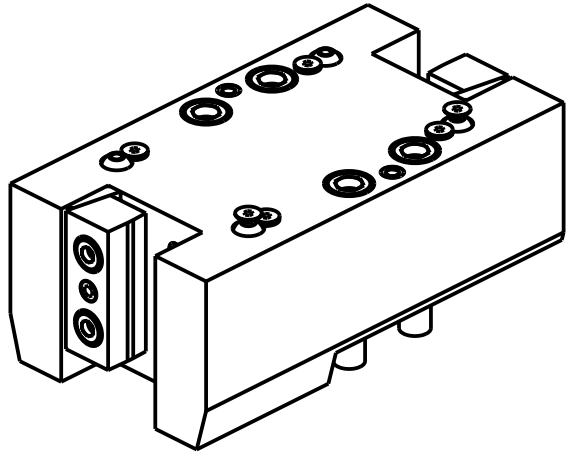

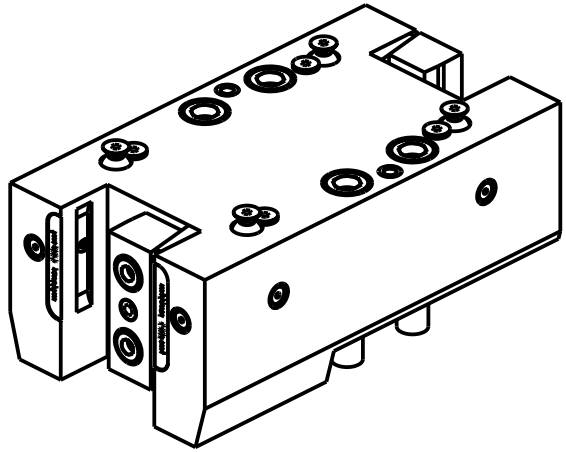

MSL0392510

Cod. MT	N°Utensili N°Tools N°Werkzeuge	Lubrificazione int. Coolant through Innenkuehlung Pmax [bar]	Lubrificazione est. Ext. coolant Aussenkuehlung	Misure Dimensions Masse	B	H
MSL0392500	2	-	X	mm	25	25
MSL0392510	2	70	X	mm	25	25
MSL0392540	2	-	X	Inch	1"	1"

DMG-MORI

MOD: SL-ZL200/203/204/250/253/254(MC-SMC) SL2500Y DL-ZL200/250(MC)

PORTAUTENSILE RADIALE DOPPIO QD=25mm / QD=1"
Radial double static tool QD=25mm / QD=1"
Radial Doppel-Werkzeughalter QD=25mm / QD=1"

M.T. srl
Via Casino Albini 480
Tel. 0541/956034-957884
Fax 0541/956341
47842 S. GIOVANNI IN M. (RN)
e-mail: mtma@mtmarchetti.com
http://www.mtmarchetti.com

MSL453-2-00

Subject to change without notice.

09/2025