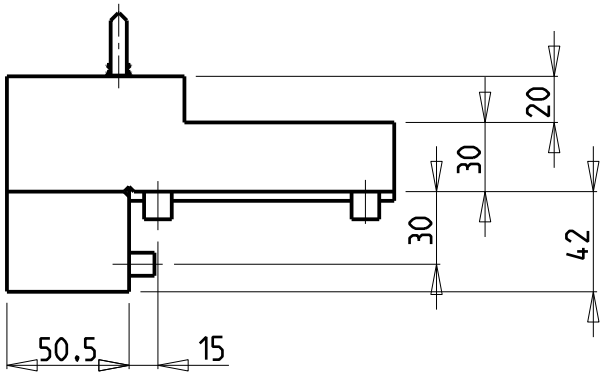

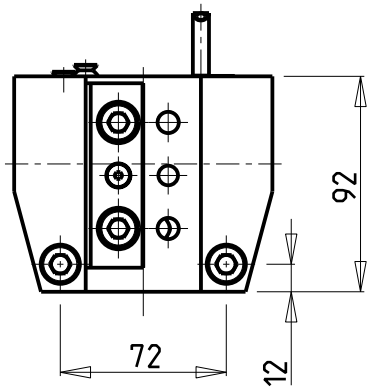

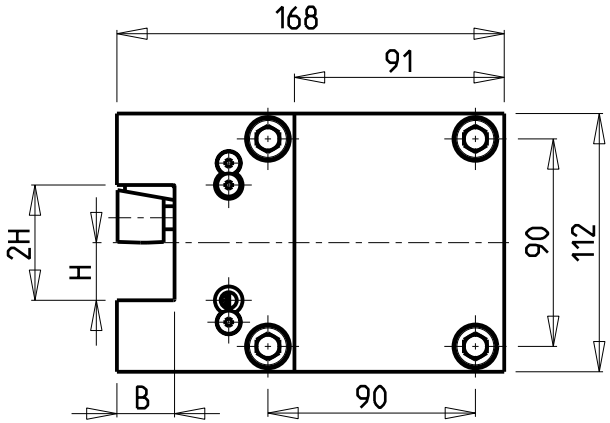

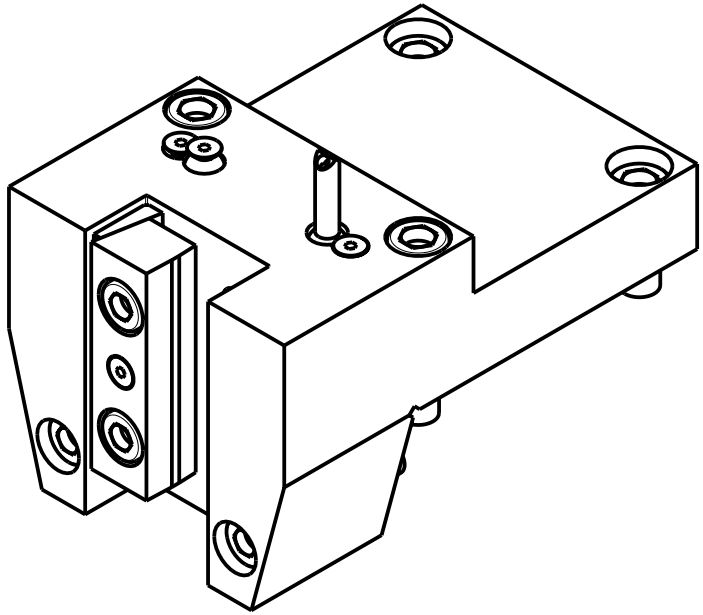

Cod. MT	N°Utensili N°Tools N°Werkzeuge	Misure Dimensions Masse	B	H
DW01302500	1	mm	25	25
DW01302540	1	Inch	1"	1"
DW01303200	1	mm	32	32
DW01303175	1	Inch	1-1/4"	1-1/4"

HW ACHEON

HI-TECH 550 MC - HI-TECH 650 MC/YMC

PORTAUTENSILE RADIALE SINGOLO QD=25mm / QD=1" / QD=32mm / QD=1 1/4"
Radial single static tool QD=25mm / QD=1" / QD=32mm / QD=1 1/4"
Radial Single-Werkzeughalter QD=25mm / QD=1" / QD=32mm / QD=1 1/4"

M.T. srl
Via Casino Albini 480
Tel. 0541/956034-957884
Fax 0541/956341
47842 S. GIOVANNI IN M. (RN)
e-mail: mtma@mtmarchetti.com
http://www.mtmarchetti.com

HWC423-3-00

Subject to change without notice.

03/2026