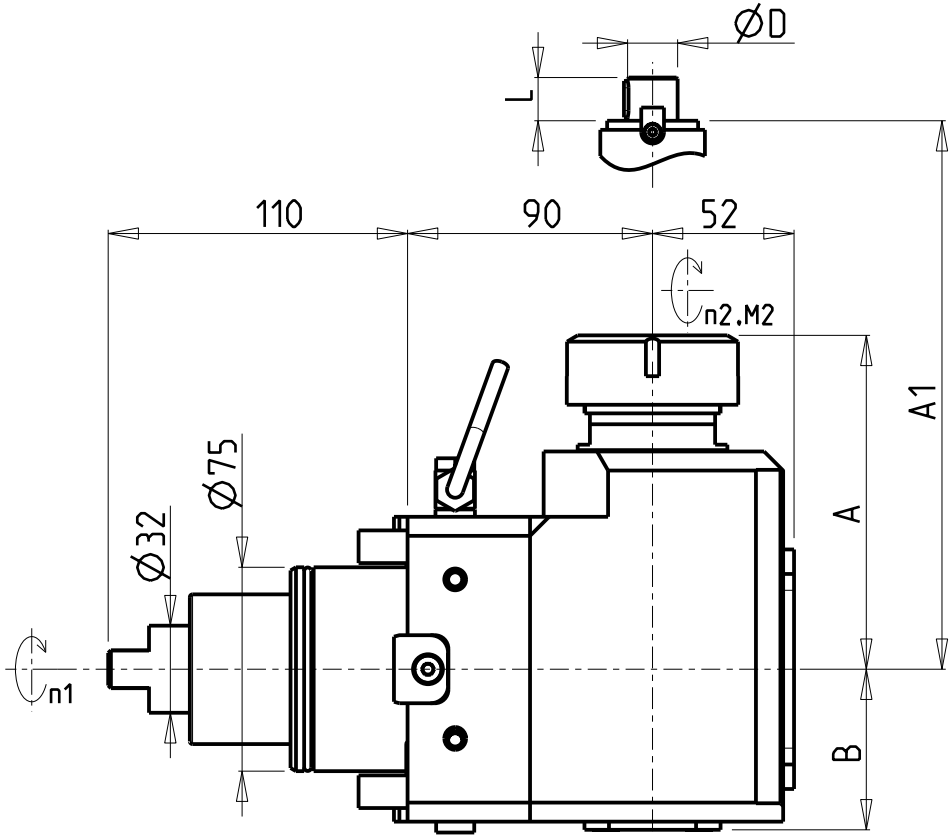

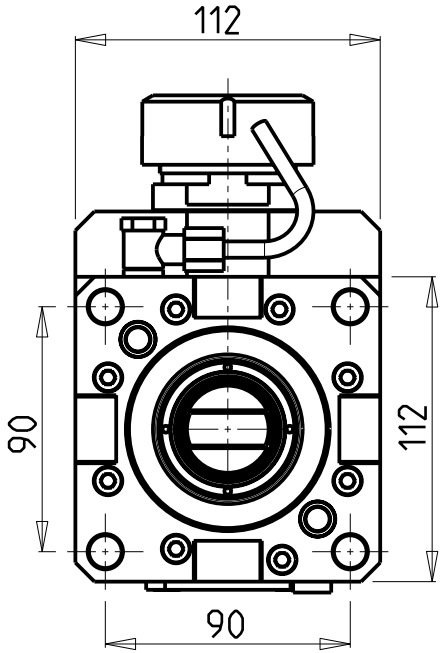

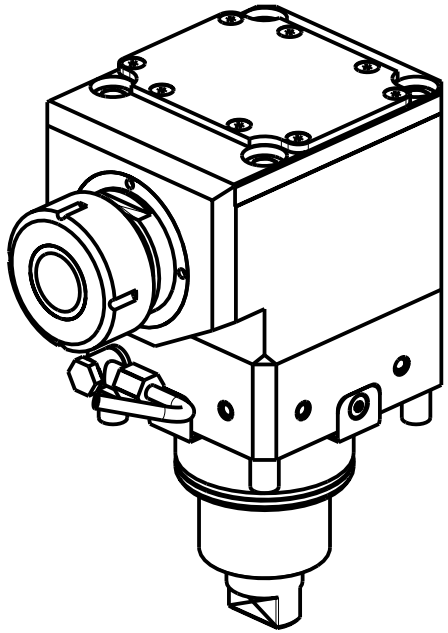

• Chiave inclusa
• Key included
• Schluessel inbegriffen

Cod. MT	Mandrino Spindle Spindel	I (n1:n2)	RPM max n2	Coppia Max Max Torque Max Drehmoment M2 [Nm]	Coppia Max Max Torque Max Drehmoment M2 [Nm]	Lubrificazione int. Coolant through Innenkuehlung Pmax [bar]	Lubr.esterna Ext. coolant Aussenkuehlung	Lav. secco Dry-run Trocken Bearb.	A	A1	B	D	L	CHIAVI NON INCLUSE Keys not included Schluessel nicht einbegriffen	
DW01370140	ER40	2:1	3000	180	X	-	X	X	122.66	-	59	-	-	CHUB46	CHSTER40
DW01370240	ER40	2:1	3000	180	X	100 (diag. 2)	X	X	122.66	-	70	-	-	CHUB46	CHSTER40
DW01372733	Ø27x33	2:1	3000	180	X	-	X	X	-	92.5	59	27	33	CHUB46	CH_VTCROCE_M12 •

HW ACHEON

HI-TECH 550 MC - HI-TECH 650 MC/YMC

MODULO MOTORIZZATO ASSIALE RIDOTTO I=2:1 H=90mm
Axial geared-down I=2:1 driven tool H=90mm
Axial angetriebenes Werkzeug untersetzt I=2:1 H=90mm

M.T. srl
Via Casino Albini 480
Tel. 0541/956034-957884
Fax 0541/956341
47842 S. GIOVANNI IN M. (RN)
e-mail: mtma@mtmarchetti.com
http://www.mtmarchetti.com

HWC190-3-20

Subject to change without notice.

03/2026