MachineTool Supplies

Unit 7, Kenyon Business Park
Pilkington Street, Bolton
Lancashire BL3 6HL
Tel: +44 (0)1204 523429



Specialists in Driven and Static Tools for Multi Axis CNC Lathes and Machining Centres

Telephone: 01204 523429
Website: www.mtsdriventools.co.uk Email: sales@mtsdriventools.co.uk

Meet the Team

The MTS technical support mission is to provide our customers with the best tooling solution possible. Our team can support you in choosing the right tooling to suit your application and we will support you after purchasing with technical data or site visits to help with tooling setup.



Dave Greenhalgh | Managing Director

Dave started the company in 1991, he has a wealth of engineering experience with over 58 years in the sector.

Dave is a time served Horizontal Borer.

Favourite product: MT Driven and Static Tooling

dave@mtsdriventools.co.uk **07850 786333**



Nick Greenhalgh |Sales Director

Nick has been with MTS for over 15 years and has over 34 years engineering experience.

Nick completed his Mechanical Engineering apprenticeship at Velden Engineering in Bolton.

Favourite products : MT Driven and Static Tooling and Brighetti Wobble Broaching

nick@mtsdriventools.co.uk **07792 296269**



Mark Greenhalgh |Technical Director

Mark has been with MTS for over 10 years he has over 15 years engineering experience.

Mark completed his Mechanical Engineering apprenticeship at Babcock Gears in Bolton. He then left the Engineering sector to work in the Prison service for 20 years.

Favourite products : Brighetti Slotting/Keyway Tooling and OMG Angle Heads

mark@mtsdriventools.co.uk **07976 159981**



Andy Barnett | Area Sales Manager

Andy Joined the team in July 2022, he has over 40 years of Engineering experience.

Andy completed his Mechanical Engineering and Design Apprenticeship at Bristol Tool & Gauge and has been involved in the design and sales of Driven Tooling for over 30 years.

Favourite products : MT Driven Tooling and OMG Angle Heads, especially Special Designs. Heads / Driven Tools

andy@mtsdriventools.co.uk **07842 244004**

Driven & Static Tooling



Adjustable Angle Head

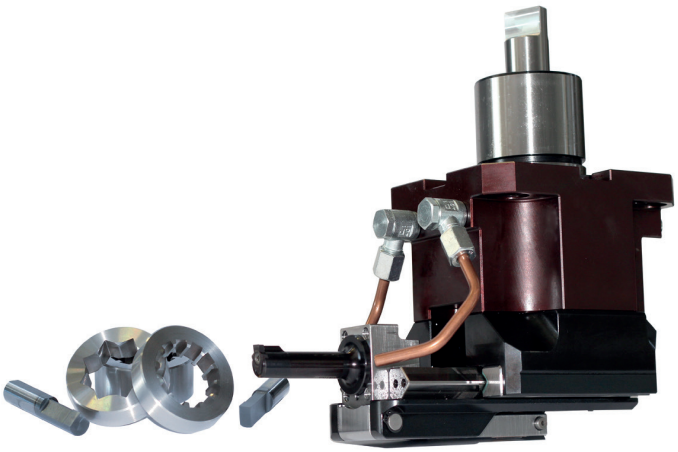

Driven Slotting Tool

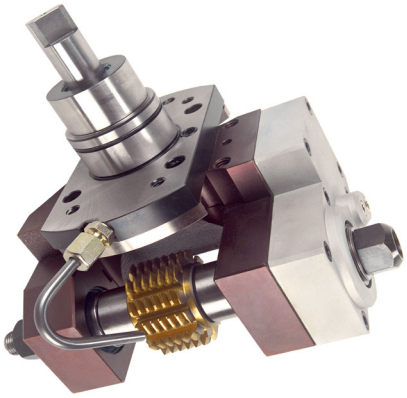

Driven Gear Hobber



Multiple Boring Bar Holder

Machine Tool Supplies have been the UK and Ireland agents for MT srl since 2004.

Based in Cattolica Italy at their state of art 9000 SQM factory, MT design and manufacture Single and Multi-output Driven and Static Tooling.

We can supply from stock over 8000 different Driven and Static Tools suitable for most Multi Axis CNC lathes, all covered by a 2 year warranty.

Please call us for more information: 01204 523429
www.mtsdriventools.co.uk Email: sales@mtsdriventools.co.uk



MTSK Quick Change System

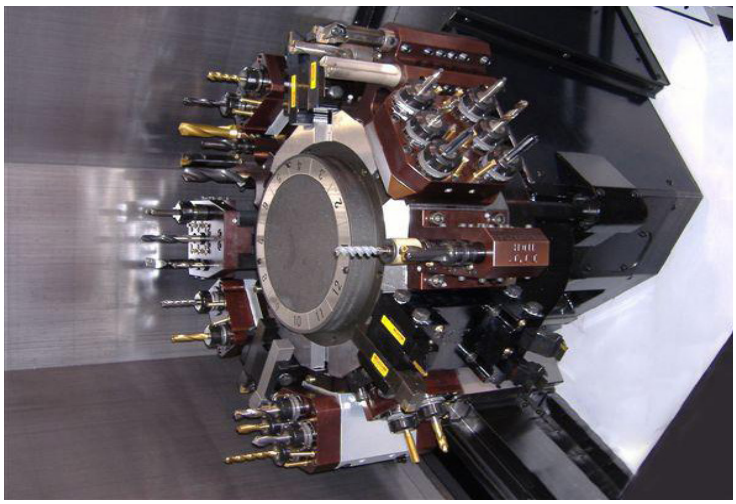

Example Turret Loaded Multiple Output MT Toolholders

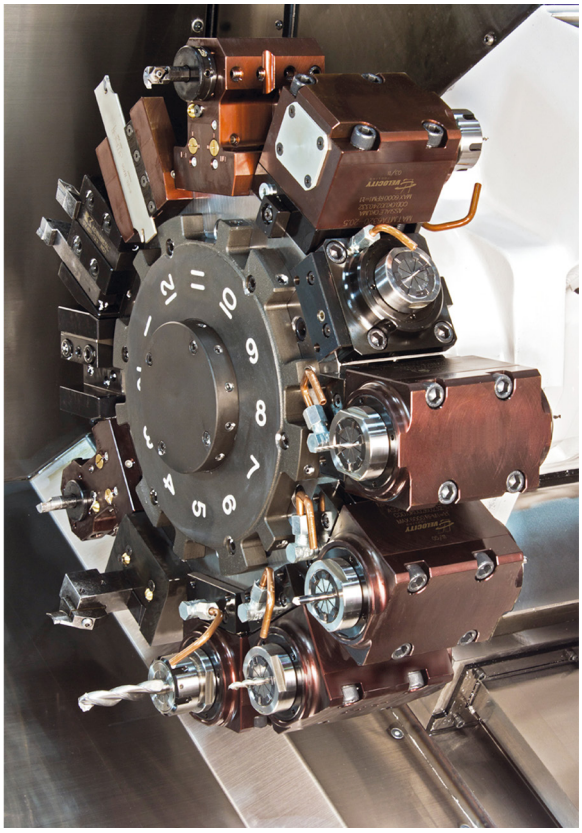

Example Turret Loaded with Standard MT Toolholders



Multiple Output Axial Driven Toolholder

Please call us for more information: 01204 523429
www.mtsdriventools.co.uk Email: sales@mtsdriventools.co.uk

Parts Conveyors

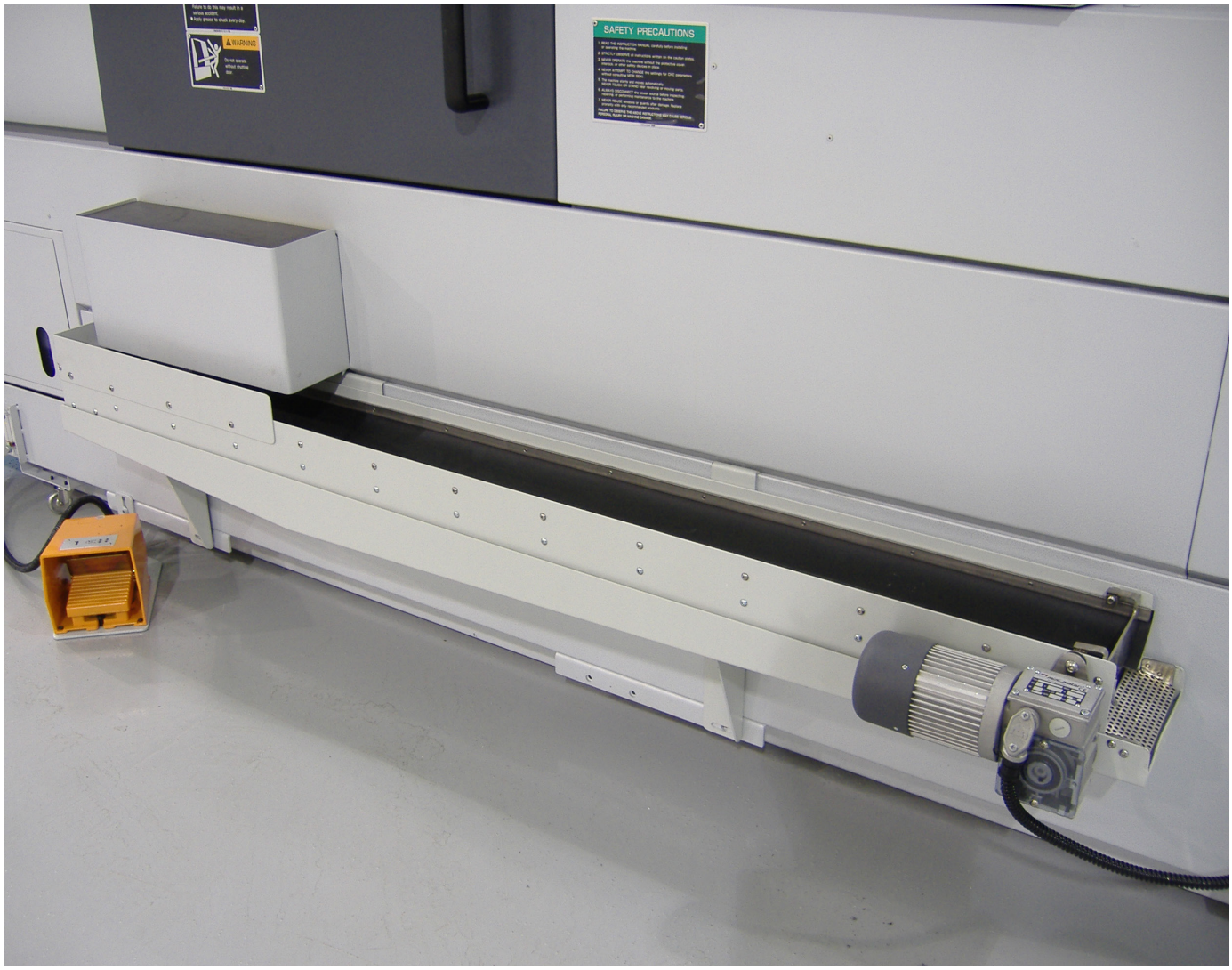

We have parts conveyors available for many different CNC Lathes. Just let us know the make and model of the machine for a quotation. They are supplied with all the necessary parts and instructions for easy installation by the customer. Movement is activated on a time basis by an M Function or can run by constant rotation.

Please call us for more information: 01204 523429
www.mtsdriventools.co.uk Email: sales@mtsdriventools.co.uk

Driven Tool & Angle Head Repairs

We repair and service all makes and models of Driven and Static Tooling, Angle Heads and Speed Increasers.

Most tools are serviced within 1-2 weeks. 48 - 72 hour turnaround is also available dependant on damage to the unit.

Tools are disassembled:

- All parts are chemically cleaned
- Components are checked for wear, damage & cracks
- A report is produced and sent to the customer
- Rebuild tools with only top quality Precision Bearings & Kluber Grease
- Replace all seals
- Check tool for alignment
- Test and Pack
- 6 months warranty on the parts that have been replaced



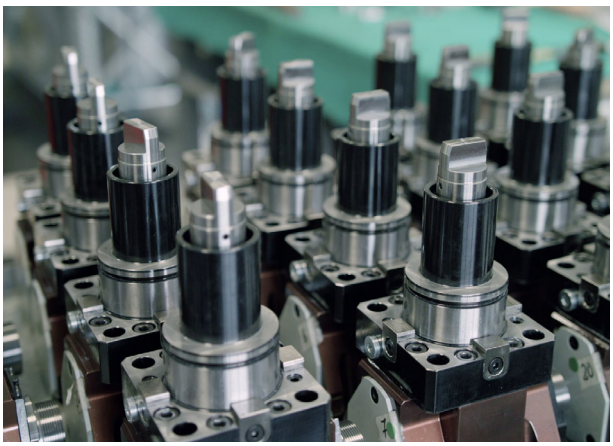

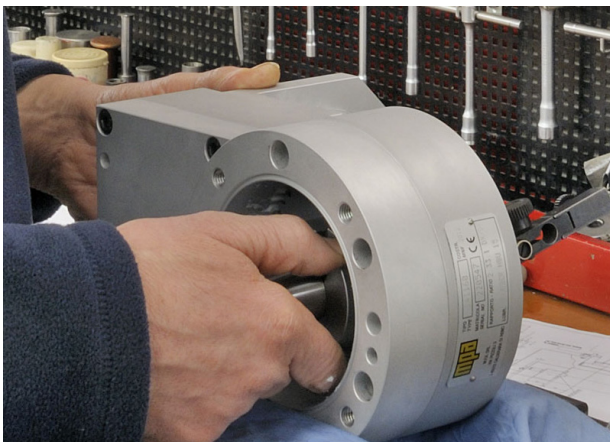



Please call us for more information: 01204 523429
www.mtsdriventools.co.uk Email: sales@mtsdriventools.co.uk

Angle Heads & Speed Increasers



Adjustable ± 90°



Double Ended



Heavy Duty

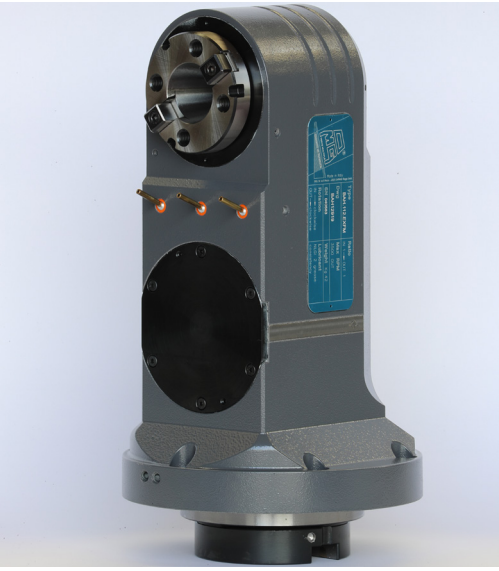

Special Design Heads

OMG have over 62 years' experience in the design and manufacture fixed 90° Angle Heads, Adjustable Angle Heads +/- 90°, Modular Angle Heads, Multi Spindle Heads, Speed Increasers and Custom Designed Heads.

Please call us for more information: 01204 523429
www.mtsdriventools.co.uk Email: sales@mtsdriventools.co.uk



Extended



Modular Heads



Multi Spindle



Offset Heads



Revolving Turret



Slim Angle Head



Speed Increasers



Variable Axis Multispindle Heads

Custom Made Angle Heads









Special angle heads are one of our main strengths. Suitable for drilling, tapping, reaming and milling. We can manufacture special heads for most machine interfaces.

Please call us for more information: 01204 523429
www.mtsdriventools.co.uk Email: sales@mtsdriventools.co.uk













Please call us for more information: 01204 523429
www.mtsdriventools.co.uk Email: sales@mtsdriventools.co.uk

Broaching Tools & Holders



Broaching holders



Broaches



External Broaching

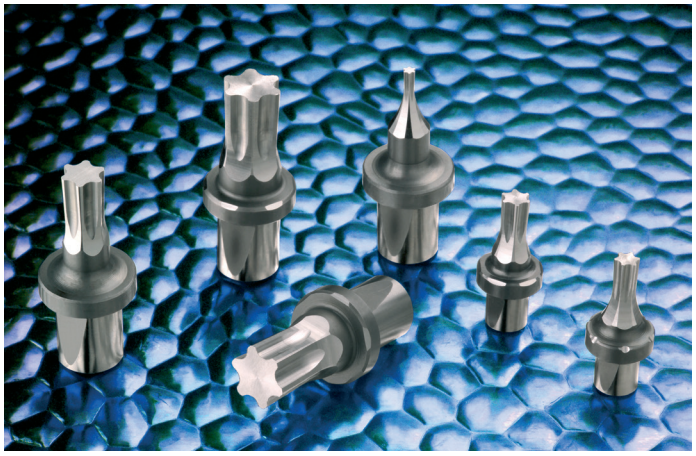

Torx Broach

We can offer from stock a full range of Broaching Tools and Holders.

- Hexagonal Broaches
- Square Broaches
- Torx Broaches
- Spline Broaches
- External Broaches
- Special Broaches made to your drawing
- Gauges for Polygonal Holes
- HPP Coated Broaches suitable for stainless steels
- Broach Holders

Please call us for more information: 01204 523429
www.mtsdriventools.co.uk Email: sales@mtsdriventools.co.uk

Slotting Tools



BT-BTA

The BT/BTA broaching systems have been developed to machine internal keyways inside blind or through holes using CNC machine tools or Slotting Machines.

Broaching Holders are available with cylindrical connection either 25Ø, 32Ø or 16Ø. The maximum broaching depth goes from 30mm to 200mm.

The Broaching Inserts are available from:

2mm to 25mm or 3/32" to 3 /4"

Tolerances H7, D10, P9, C11.

All available from stock.

Please call us for more information: 01204 523429
www.mtsdriventools.co.uk Email: sales@mtsdriventools.co.uk

Reduction Bushes



Bush

Brighetti's Reduction Bushes are all hardened and ground.

Metric sizes available from Ø16mm to Ø60mm and imperial sizes from 3/4" and 1.0"

Special Reduction Bushes can be manufactured to customer drawings.

- Slotted Bushes
- Screwed Bushes
- Conical Bushes
- Elastic Bushes
- Anti-Vibration Bushes

Please call us for more information: 01204 523429
www.mtsdriventools.co.uk Email: sales@mtsdriventools.co.uk

Collets



High Pressure Sealed Collets



Standard ER Collets



Straight Shank Collet Chucks



Tapping Collets

Quality ER8 to ER50 Collets in three accuracies, supplied individually or in Boxed Sets. Sealed Collets and Tapping Collets also individually and in Boxed Sets. All available from our stock.

Please call us for more information: 01204 523429
www.mtsdriventools.co.uk Email: sales@mtsdriventools.co.uk

QPM Coolant Nozzles

QPM manufacture coolant nozzles and related accessories for use on CNC Lathes, Machining Centres, Grinders, Screw Machines, Manual Mills and assorted production equipment. They provide coolant delivery solutions to solve all your production headaches.

All nozzles are available on a short lead time.


Jet Bolt


Turret Jet



Cap Jet


Jet Bolt


Plug Jet



Mill Jet


Lock Jet


Pressure Max


Compression Fittings


Dual Fit


Spray Tips


Extension Tubes

Please call us for more information: 01204 523429
www.mtsdriventools.co.uk Email: sales@mtsdriventools.co.uk

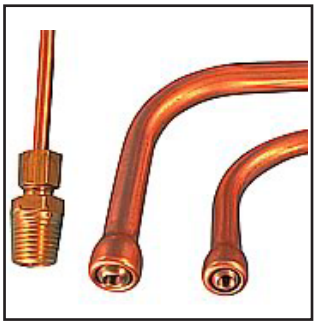

Jet Tube



Sweat Tube



Swivel Max



Moduar Hose System



Brass Balls



Black Eye



Bug Eye



Lollipop



Twin Pop



Odd Ball



Jiffy Jet



Screw Ball



Presto Port



Manifold



Bell Valves



ChuckPuck



Bore Puck



Copper Tubing

Please call us for more information: 01204 523429
www.mtsdriventools.co.uk Email: sales@mtsdriventools.co.uk

Spindle Tooling

S C H Ü S S L E R

HAWK EYE®



Please call us for more information: 01204 523429
www.mtsdriventools.co.uk Email: sales@mtsdriventools.co.uk

The new precision ER collet chuck **HAWK EYE®**

engineered by SCHÜSSLER

We are proud to present our new precision ER collet chuck HAWK EYE®. Highly accurate runout quality additional with high clamping forces allow a high efficient cutting process.

Thereby you can use the full potential of your machine and cutting tools.

MADE IN GERMANY

HAWK EYE® – your benefits in focus

The deep-seated collet
inside the chuck guarantees:

- **runout of cutting tool**
  <= 3 µ at 2,5 x D*
- maximum **radial rigidity**
- **more contact in the chuck**,
  for double clamping forces in comparison
  with a standard ER collet chuck

* in use of original SCHÜSSLER collets.

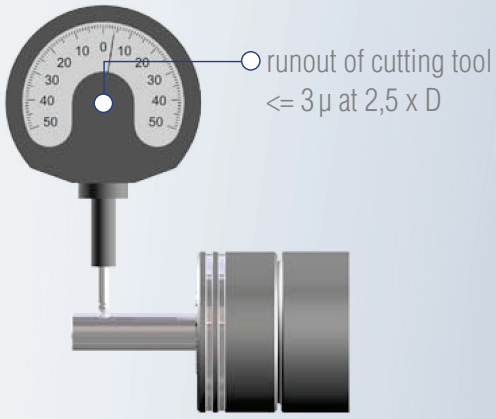

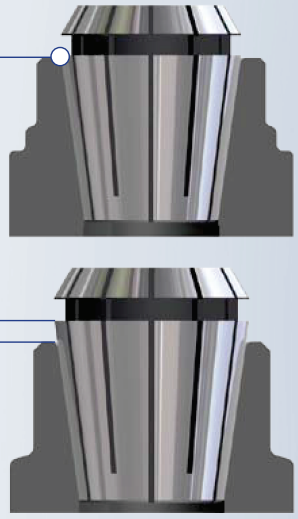

Fine pitch thread
for maximum clamping force

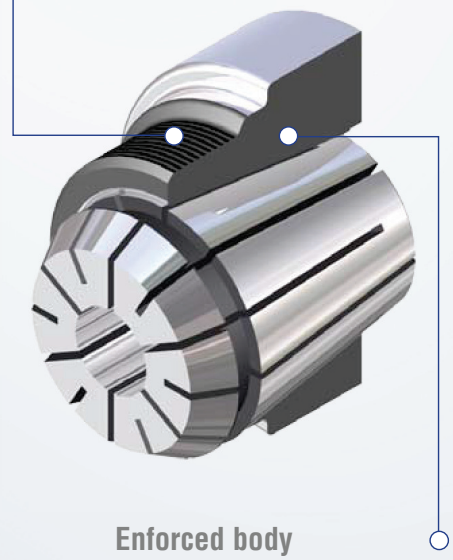

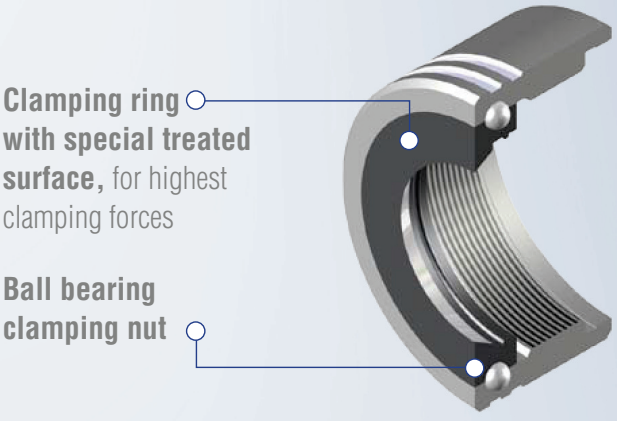

Please call us for more information: 01204 523429
www.mtsdriventools.co.uk Email: sales@mtsdriventools.co.uk

Spindle Tooling



SCHÜSSLER TOOL HOLDING SYSTEMS – your lead in production!

MADE IN GERMANY

Brilliant performance from Bodelshausen

For almost 50 years, Schüssler has been manufacturing tool holders from a single location – Bodelshausen. Today it is one of the leading manufactures.
Founded by Karl Schüssler in 1970, right from the beginning, the company began producing tool holders.

Our quality features are way beyond the requirement of standard.
Our experienced sales staff provide friendly and competent consulting services for all our products.

Our product range (excerpt)

- Collet chucks, ER and ER »Mini«
- NEW: HAWK EYE® High-Precision collet chuck
- Shrink fit holder 4,5° and 3° (slim)
- NEW: TITANIUM - shrink fit chuck with anti-pull-out function
- End mill holder weldon
- Tool holders with coolant for »Cool Tool« tool
- Shell mill holder, and many more
- Shrink-fit unit + equipment

All tool holders are available in all standard taper shanks, such as:

- HSK-A 40/50/63/80/100
- HSK-E 32/40/50 and HSK-F 63
- SK 40 and 50 DIN 69871 Form AD/B
- MAS BT 30/40/50 and BT with double contact BTD 30/40
- Polygonal shank »CORUM« C4/5/6/8

All types of tool holder are available in various lengths as standard and fine balanced to G 2,5 at 25.000 min^{-1} or max. residual imbalance ≤ 1 gmm.

Please call us for more information: 01204 523429
www.mtsdriventools.co.uk Email: sales@mtsdriventools.co.uk

Centres and Face Drivers





Sassatelli specialises in the production of accessories for high precision mechanical tooling: Live Centres, Dead Centres, Front Driving Systems and Drivers for Pipes, Thread Cutting and Tapping Machines, Grinding Wheel Dressers, Knurling Devices and Special Devices upon customer's drawing.

Please call us for more information: 01204 523429
www.mtsdriventools.co.uk Email: sales@mtsdriventools.co.uk

CNC Bar Puller

Increase your Productivity, Start Saving Time and Money Today Using the Grippall CNC Bar Puller.

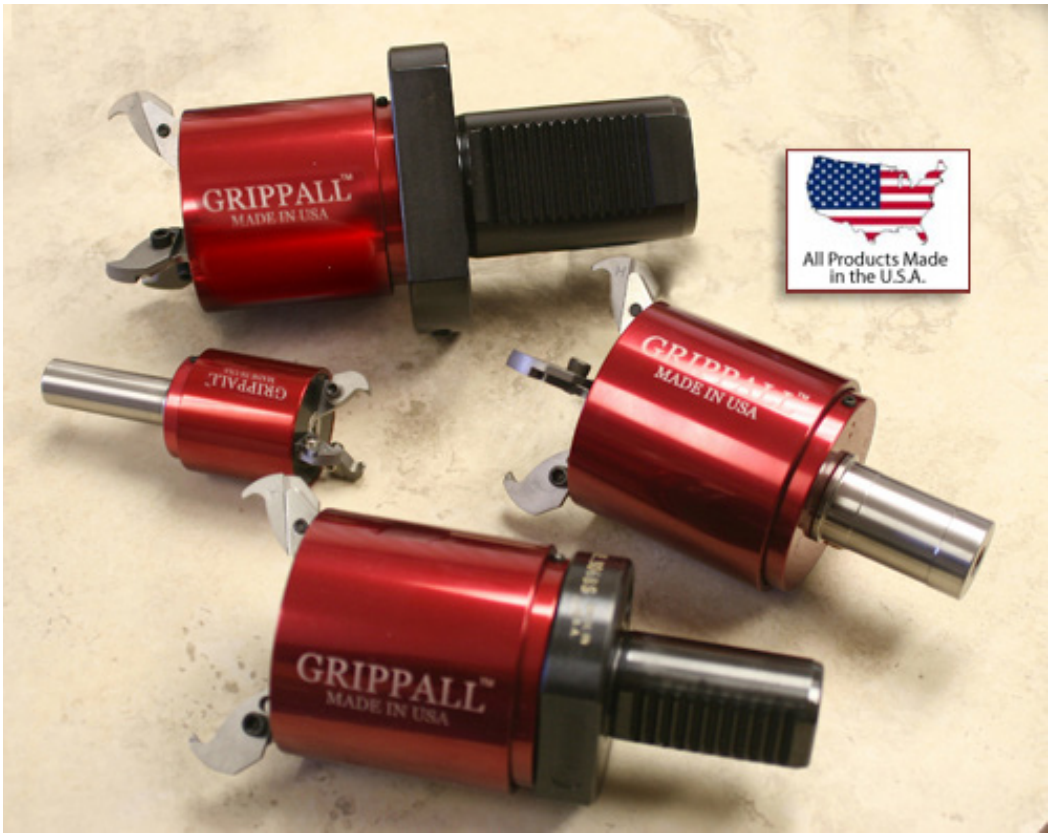

Why use a Grippall CNC Bar Puller?

- They provide a simple, inexpensive method for automating any CNC lathe.
- Quality Design: made from Stainless Steel and Anodized Air Craft Aluminum.
- Bar Pullers don't use up valuable floor space.
- They are very easy to set up and use - no electrical interface required.
- Maintenance free operation.
- They can be easily moved from one machine to another.
- A wide gripping range is obtained from a compact design 3mm-104mm.
- Can be used on a variety of material shapes.
- Use Bar Puller as a picker so finished work piece doesn't get damaged.
- Coolant or Air Actuated.
- 1 Bar of pressure is enough to pull a 90kg bar.
- Available with various Cylindrical Shanks & VDI30,40,50.

Please call us for more information: 01204 523429
www.mtsdriventools.co.uk Email: sales@mtsdriventools.co.uk

Workholding



For nearly 50 years Allmatic has brought to market machine vices that are of the highest precision, repeatability, and reliability.

Investing in high-quality workholding solutions can only have maximum impact on productivity when your workholding is rigid, repeatable, and reliable. These vises provide outstanding capacity for a variety of applications, from general and production machining to high precision 5-axis milling.

From high-pressure hydraulic to tombstone configurations Allmatic has a hold you can count on.

Please call us for more information: 01204 523429
www.mtsdriventools.co.uk Email: sales@mtsdriventools.co.uk

MachineTool Supplies

Unit 7, Kenyon Business Park
Pilkington Street, Bolton, Lancashire BL3 6HL

Please call us for more information: 01204 523429
www.mtsdriventools.co.uk Email: sales@mtsdriventools.co.uk